Classiclantern™
by Ultraframe

V1 | January 2020

CLASSIC 20° LANTERN
FABRICATION GUIDE

Classiclantern™
by Ultraframe

How to use this guide

This guide is designed to help you fabricate the Classic Lantern and covers all the standard preparations required.

To get the most from this guide, we recommend you read and familiarise yourself with the preparations before you begin to fabricate.

Jigs Required

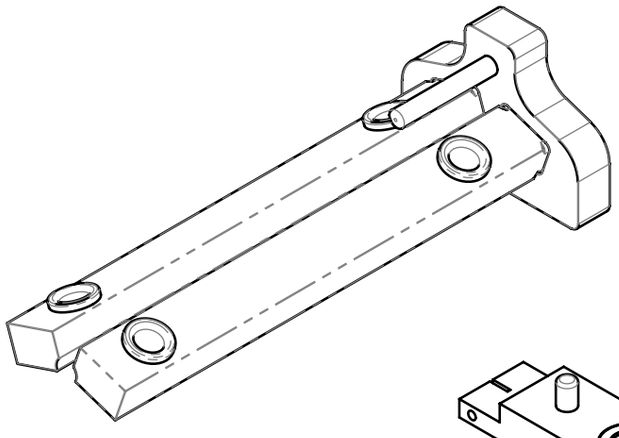

LANHDJ
Lantern Hip Drill Jig

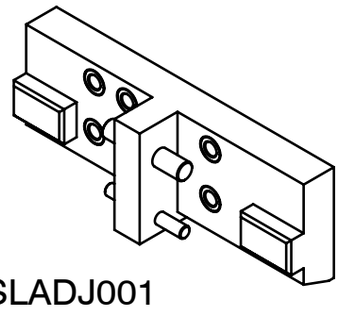

SLADJ001
SpeedLOCK Drill Jig

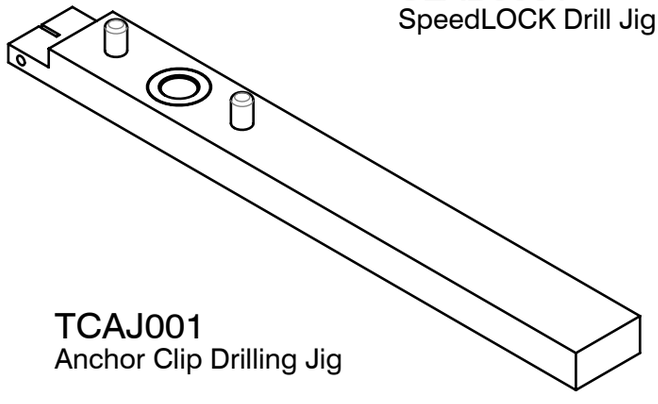

TCAJ001
Anchor Clip Drilling Jig

13350 - REV -.06

Contents

Rider Rail & Sleeve

Assembly

The assembly image below shows the uPVC sleeved rider rail positioned on a 70mm kerb. The rail contains a bolt slot onto which the hips and transoms of the lantern are supported.

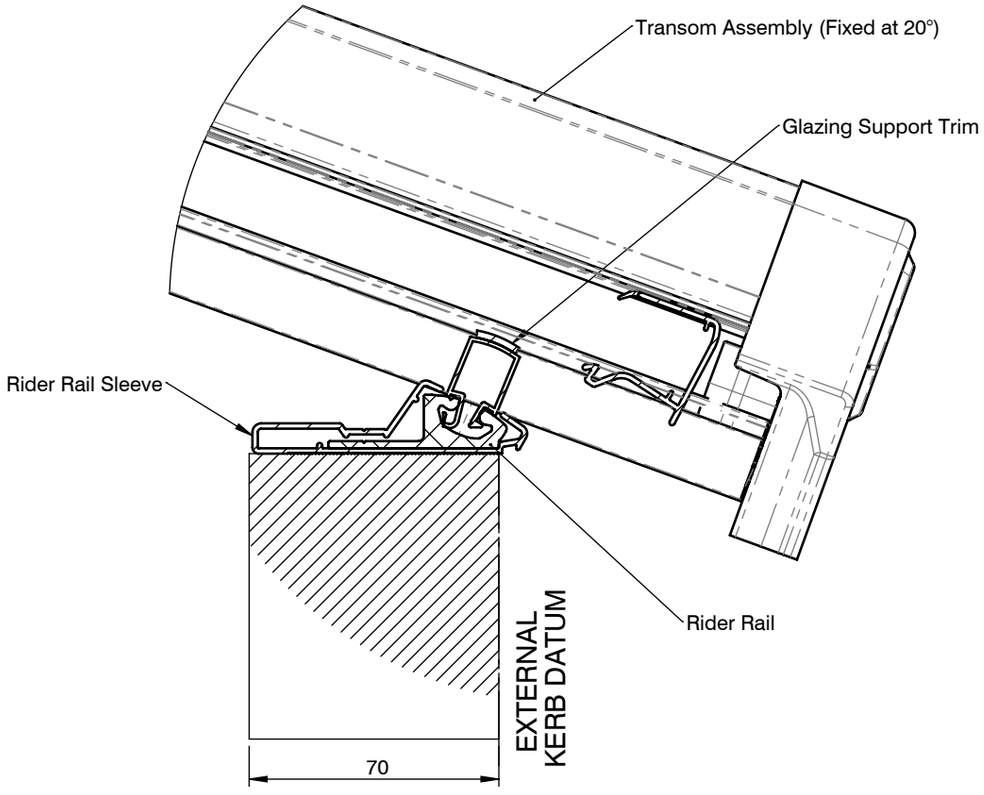

Lantern kerb setout

Sizes of the lantern stated in the software paperwork refer to the external kerb size of the lantern (see assembly image above)

eg. If you were specifying a 2m x 1m lantern on a 70mm kerb, the external size of the kerb would be 2000mm x 1000mm, making the aperture size 1860mm x 860mm.

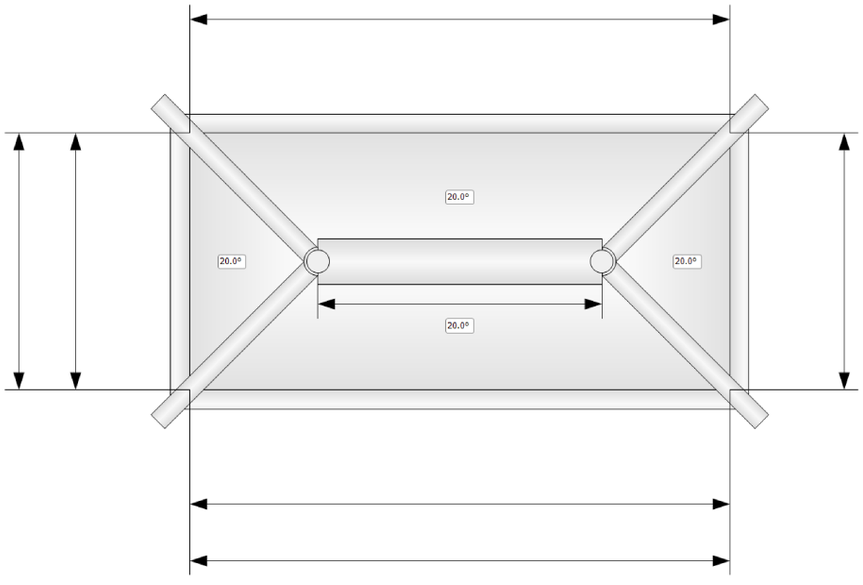

Cutting the Rider Rail & Sleeve

Tip: Slide the rider rail inside the uPVC sleeve. This will make it quicker to cut and mitre each section and will give greater accuracy.

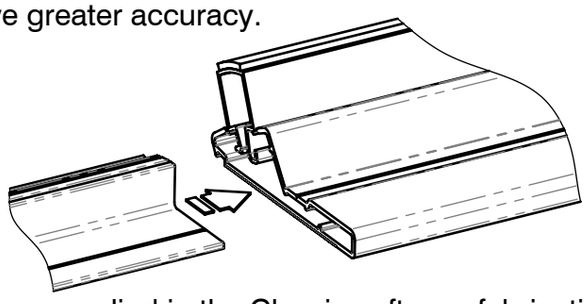

Working from the roof plan supplied in the Classic software fabrication report, mitre the rider rail and sleeve to the dimensions specified for the sleeve on the cutting list.
Note: The dimension given in the report relates to the overall (external) length of the section including any mitres that may be added.

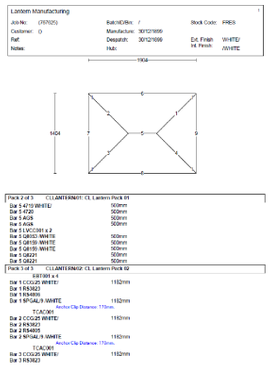

Lantern Manufacturing

Job No: (707025)	Batch/Drlln: /	Stock Code: FRES	
Customer: D	Manufactured: 30/12/1899		
Ref:	Despatch: 30/12/1899	Ext. Finish: WHITE/	
Notes:	Hub:	Int. Finish: /WHITE	

1904

1404

Pack 2 of 3 CLLANTERNO1: CL Lantern Pack 01	
Bar 5 4710 WHITE/	500mm
Bar 5 4720	500mm
Bar 5 4426	500mm
Bar 5 4426	500mm
Bar 5 LWCG01 x 2	
Bar 5 Q8159 WHITE	500mm
Bar 5 Q8159 WHITE	500mm
Bar 5 Q8159 WHITE	500mm
Bar 5 G8221	500mm
Bar 5 G8221	500mm
Pack 3 of 3 CLLANTERNO2: CL Lantern Pack 02	
EBT001 x 4	
Bar 1 CCG25 WHITE/	1182mm
Bar 1 RS3623	
Bar 1 RS4855	
Bar 1 NFGAL/9 WHITE	1182mm
Anchor Clip Distance: 170mm	
TCAC001	
Bar 2 CCG25 WHITE/	1182mm
Bar 2 RS3623	
Bar 2 RS4855	
Bar 2 NFGAL/9 WHITE	1182mm
Anchor Clip Distance: 170mm	
TCAC001	
Bar 3 CCG25 WHITE/	1182mm
Bar 3 RS3623	

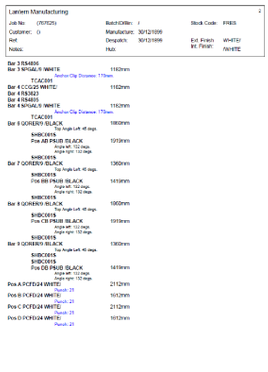

Lantern Manufacturing

Job No: (707025)	Batch/Drlln: /	Stock Code: FRES	
Customer: D	Manufactured: 30/12/1899		
Ref:	Despatch: 30/12/1899	Ext. Finish: WHITE/	
Notes:	Hub:	Int. Finish: /WHITE	

Bar 3 RS4855	
Bar 3 NFGAL/9 WHITE	1182mm
Anchor Clip Distance: 170mm	
TCAC001	
Bar 4 CCG25 WHITE/	1182mm
Bar 4 RS3623	
Bar 4 RS4855	
Bar 4 NFGAL/9 WHITE	1182mm
Anchor Clip Distance: 170mm	
TCAC001	
Bar 6 GORERO /BLACK	1860mm
Top Angle Left: 45 degs.	
SHBC001A	
Pos A8 PSUB /BLACK	1913mm
Angle left: 132 degs.	
Angle right: 132 degs.	
SHBC001A	
Bar 7 GORERO /BLACK	1360mm
Top Angle Left: 45 degs.	
SHBC001A	
Pos B8 PSUB /BLACK	1419mm
Angle left: 132 degs.	
Angle right: 132 degs.	
SHBC001A	
Bar 8 GORERO /BLACK	1860mm
Top Angle Left: 45 degs.	
SHBC001A	
Pos C8 PSUB /BLACK	1913mm
Angle left: 132 degs.	
Angle right: 132 degs.	
SHBC001A	
Bar 9 GORERO /BLACK	1360mm
Top Angle Left: 45 degs.	
SHBC001A	
SHBC001A	
Pos D8 PSUB /BLACK	1419mm
Angle left: 132 degs.	
Angle right: 132 degs.	
Pos A PCFD/24 WHITE/	2112mm
Punch: 25	
Pos B PCFD/24 WHITE/	1612mm
Punch: 25	
Pos C PCFD/24 WHITE/	2112mm
Punch: 25	
Pos D PCFD/24 WHITE/	1612mm
Punch: 25	

Cutting the Rider Rail & Sleeve

1. Once all four rider rail sleeve sections have been mitred, cut the glazing support sections to the lengths and angles specified in the PVC cutting list. If you wish to square cut sections 27mm should be deducted from the overall length.
2. Once all glazing support sections have been cut, insert the sections into the rider rail bolt slot in the orientation shown below. If there are any bars other than the hips, ensure that the bolts have been inserted into the bolt slot prior to inserting the glazing support sections.

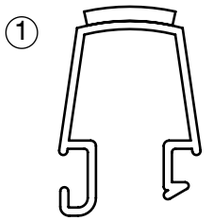

PSUB
Glazing Support Trim

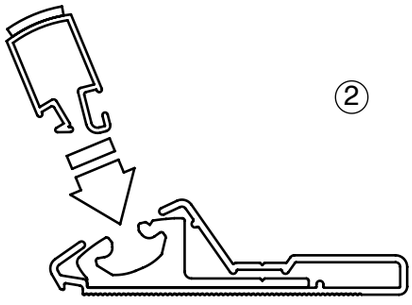

3. Finally insert any bolt for the hip bars at the ends of the rail. Secure these with a spiggot nut to stop them from coming loose in transit.

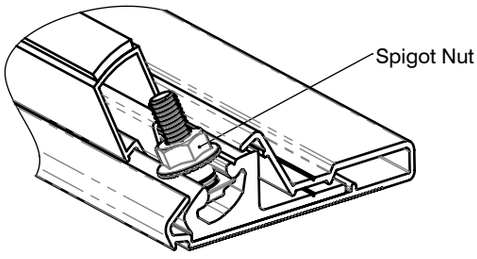

Rafters & Hips

Assembly

The Classic Lantern uses four bar assembly types to make up the structure of the roof. Below shows the bar assemblies.

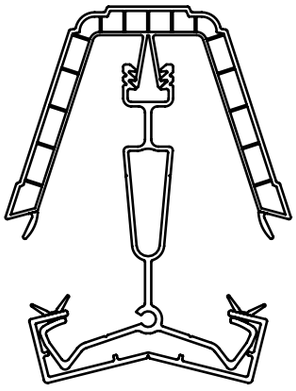

Light edwardian hip (PVC)

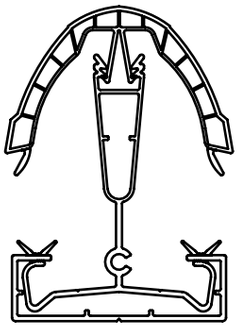

Light weight transom (PVC)

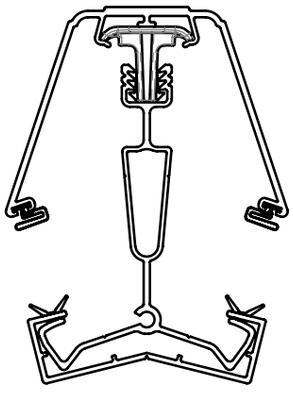

Light edwardian hip (aluminium)

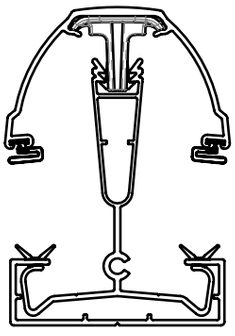

Light weight transom (aluminium)

Cutting the glazing bars

Working from the roof plan supplied in the Classic software fabrication report, cut the glazing bars to the length specified on the cutting list.
Note: The dimension given in the report relates to the overall (external) length of the section including any mitres that may be added.

Hip fixing at ridge prep

The hip bars are connected to the ridge body using the ridgeLOCK connectors. These connectors need to be pre fitted to the hip bars. In order to prepare for the ridgeLOCK components, the hip bars first need to be pre-drilled.

Use the speedlock glazing bar jig (SLADJ001) to accurately drill (using a ∅4.5mm drill bit) the mounting holes for the ridgeLOCK components.

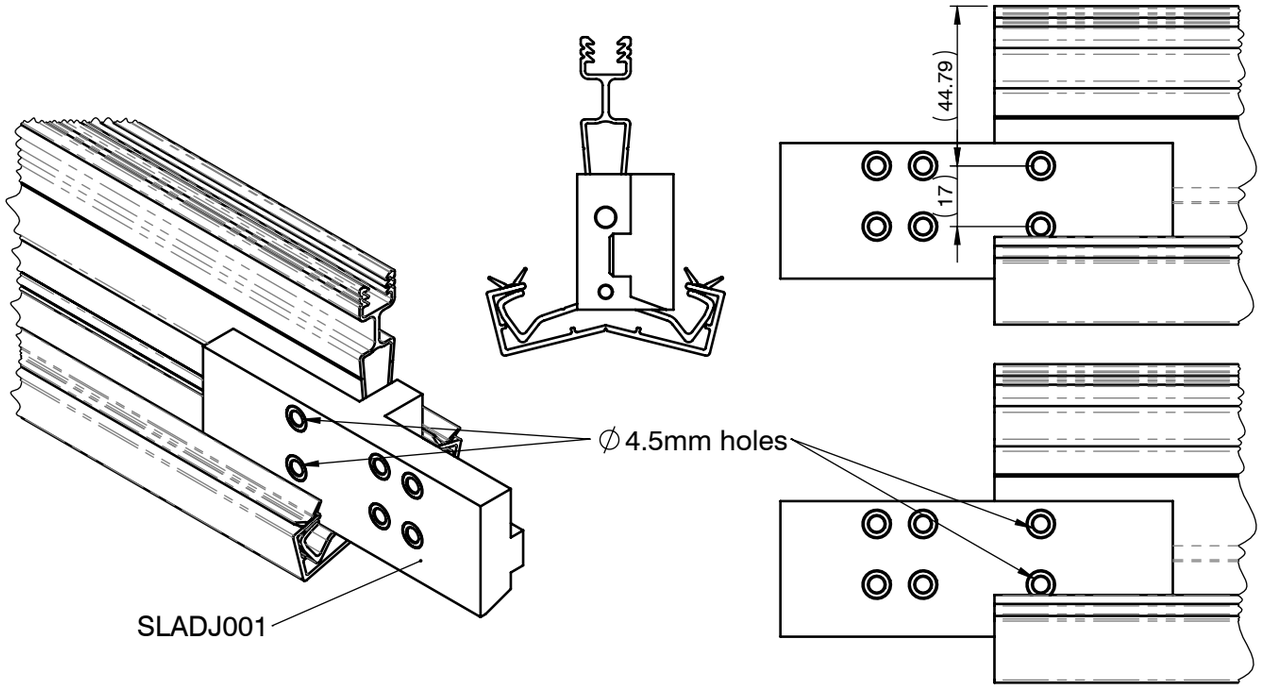

Fit the ridgeLOCK (RS4805/RS4086) into the end of the pre drilled hip bar and secure in place using EBT001 (M5 x 12) screw in the upper hole and RS3823 (M5 x 20) screw in the lower hole.
Note: The ridgeLOCK components are handed and are indicated on the component itself. Ensure that the correct part is fitted to either the LH or RH bar.

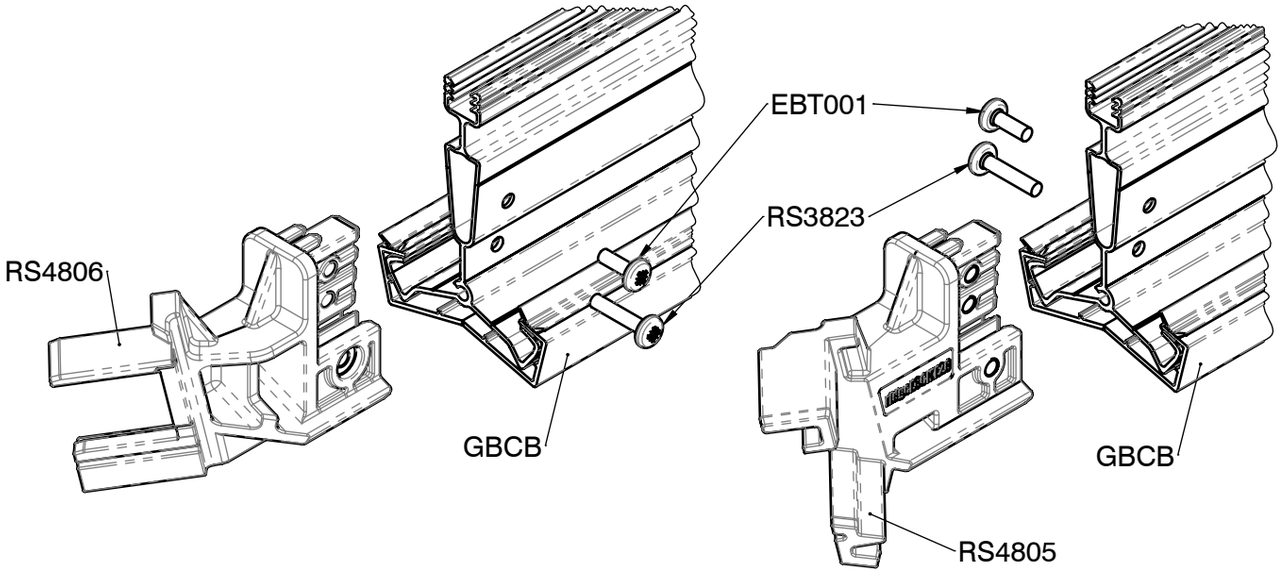

Hip fixing at rider rail prep

When the hip bars meet the rider rail they are secured with bolts located in the bolt slot of the rider rail.

Use jig LANHDJ to accurately drill the rider rail mounting hole positions in the appropriate hip bar (specified in paperwork).

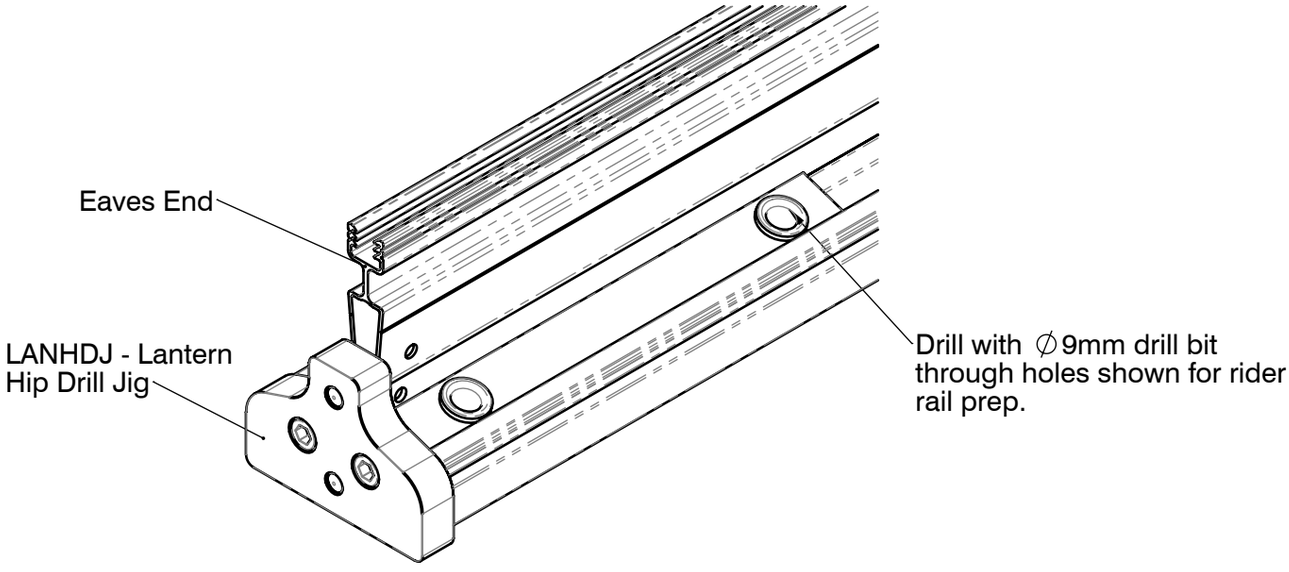

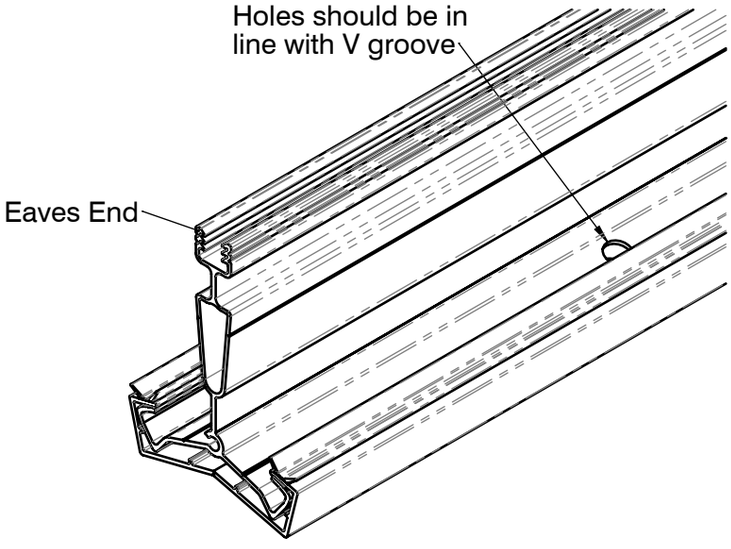

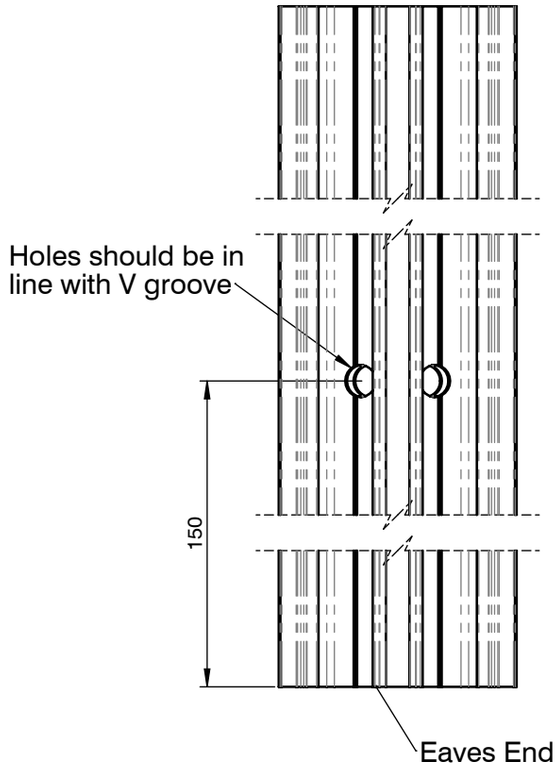

Transom fixing at ridge prep

On larger lanterns, transoms going to the ridge may be specified. These are fixed with twin bolts slotted into the ridge body and the rider rail bolt slot.

Mark the hole positions shown below then drill using 9mm drill bit.

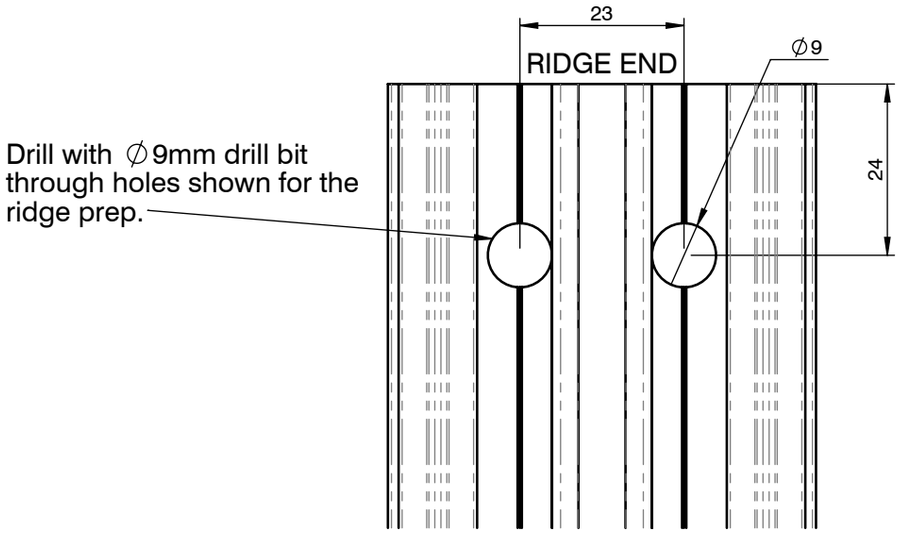

Transom fixing at rider rail prep

Mark the hole positions shown below, then accurately drill the rider rail mounting hole positions using a 9mm drill bit.

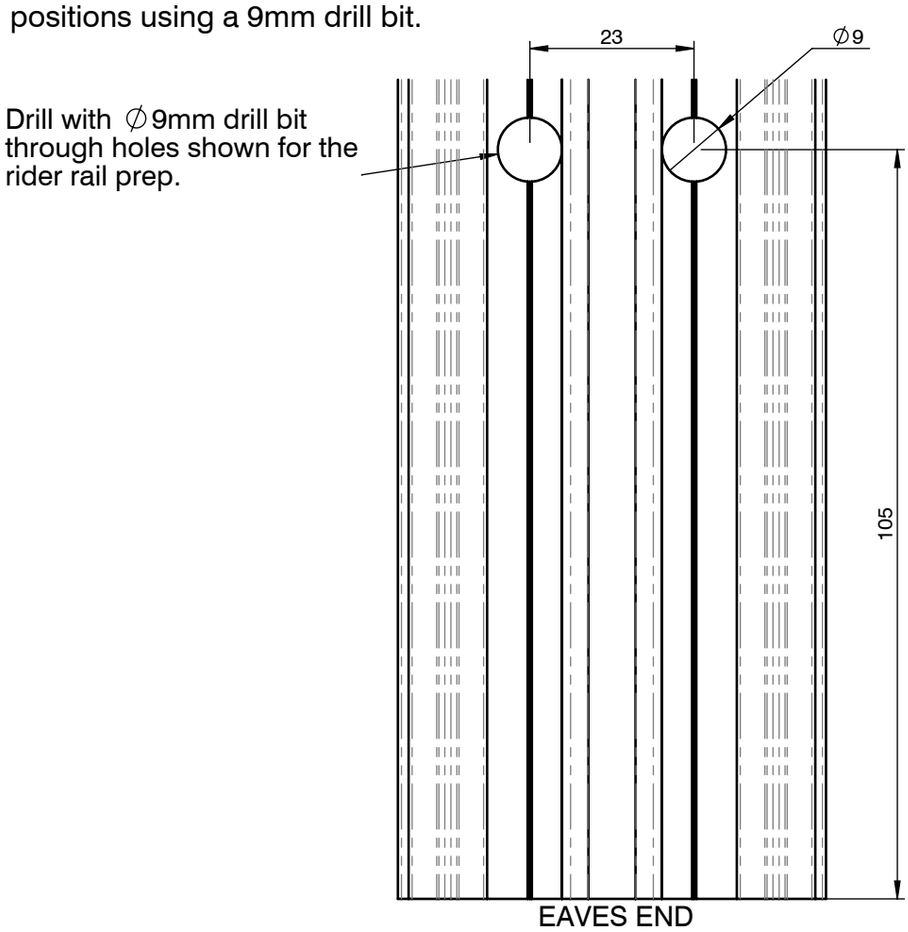

Three bar ridge end preparation

When a central bar is specified at the ridge end, the bar requires specific preparation to interact with the hip bars.

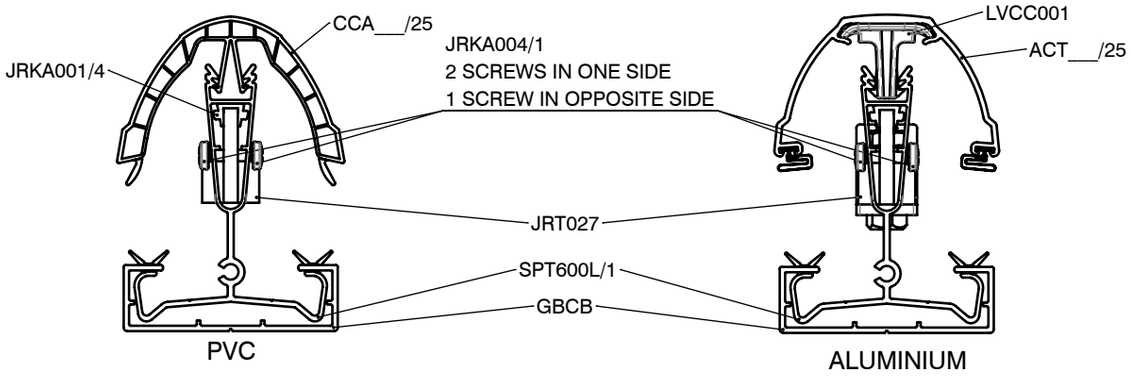

1. Cut the transom to the specified length indicated in the cutting list.

2. The bar then requires an arrowhead cut of 43° on each side. This can be seen on the small parts section of the fabrication document.

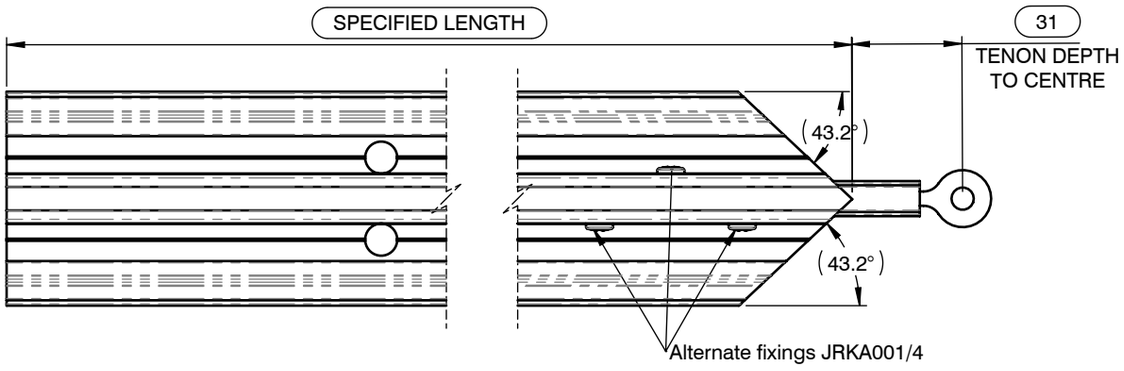

3. Insert the tenon with the plastic spacer in place down the centre of the bar leaving 31mm from the end of the bar to the centre of the tenon fixing hole. Alternativly leave 39mm from the end of the bar to the end of the tenon (shown below).

4. Drill through the bar and tenon using a ∅3.5mm drill bit at the centres shown below.

5. Fix the tenon in place using 3 x JRKA001/4 fixings, using the spacings indicated below. Remember to alternate the side of the bar which the fixings are inserted.

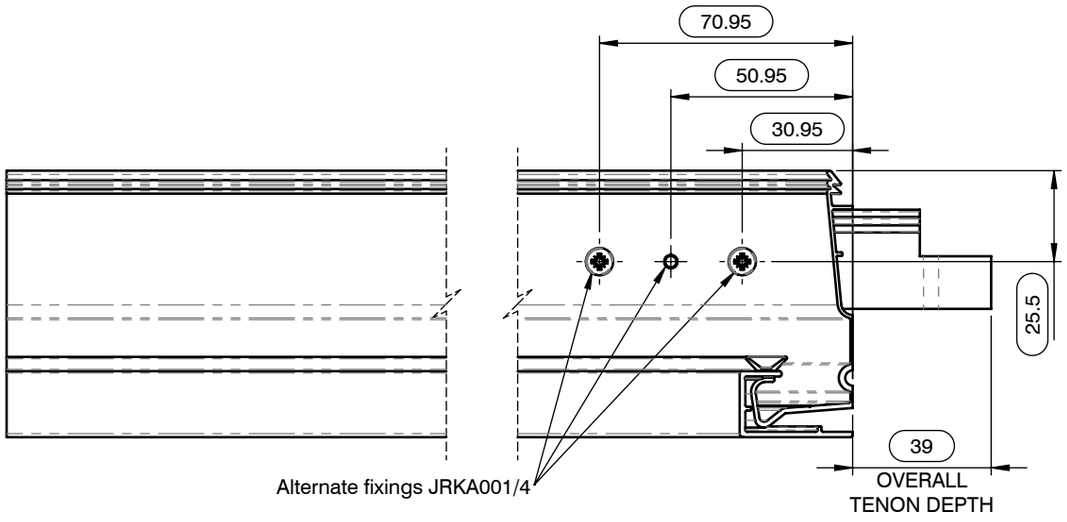

Fixing jack rafter brackets

1. Working from the roof plan supplied in the software fabrication report, cut the jack rafter to the length specified on the cutting list.
Note: The dimension given in the report relates to the overall (external) length of the section including any mitres that may be added.

2. Once cut to the desired length, apply the required mitre cuts to the section.
The fabrication paperwork which shows the angle the jack rafter should be cut to.

3. Mark the hole positions shown below then secure in place using 3x JRKA004/1.

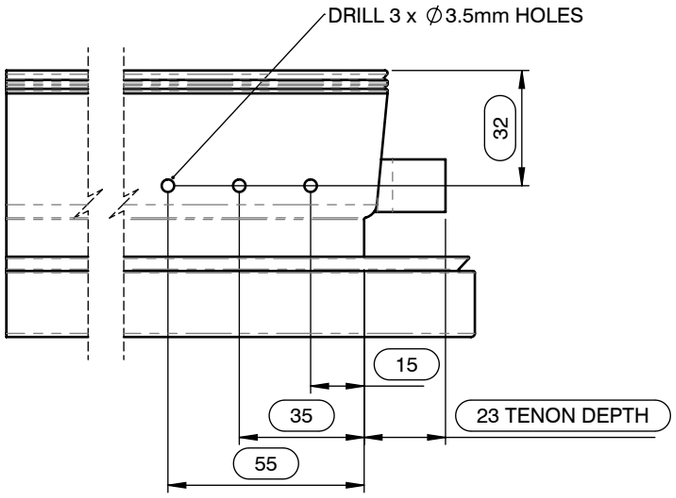

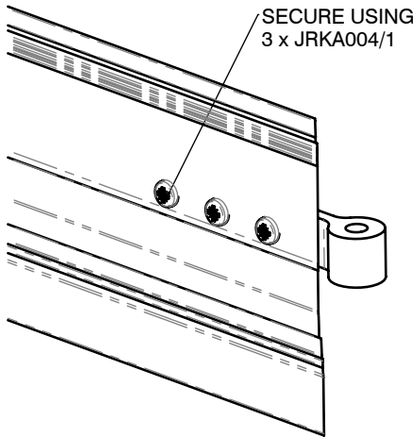

4. Mark the distance specified from the eaves. Using a 25mm hole saw create the inital cut, remove the remainder of the material using a hack saw to create the cut out detailed below.

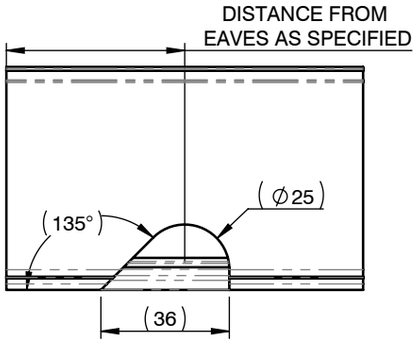

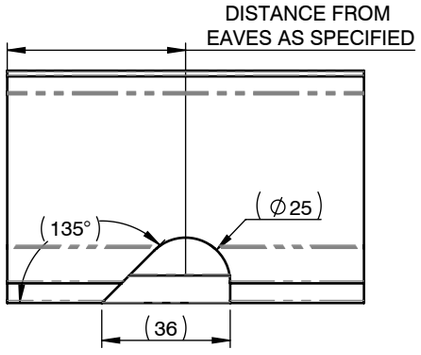

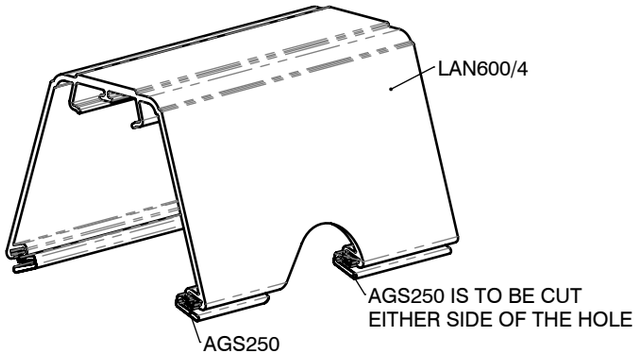

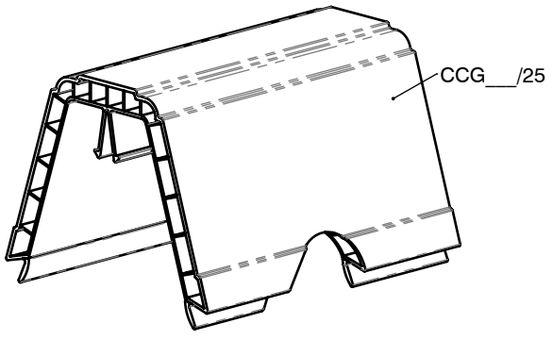

Hip Prep for Jack Rafters

If jack rafters are present on the roof, the hip bars will require fixing holes to accept the jack rafter brackets in the desired locations on the roof.

1. Looking at the hip bars in the roof fabrication report, take the centre position shown and mark on the hip bar as specified.

2. Place the jack rafter hip bracket onto the bar and align the centre with the mark.

3. Drill two ∅3.5mm holes through the holes on the jack rafter bracket.

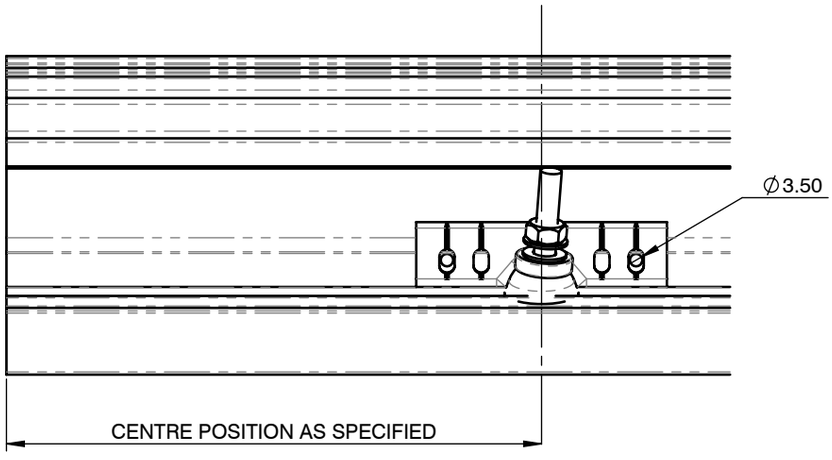

4. Using the fixings provided (JRKA004/1) securly fix the jack rafter bracket in place.

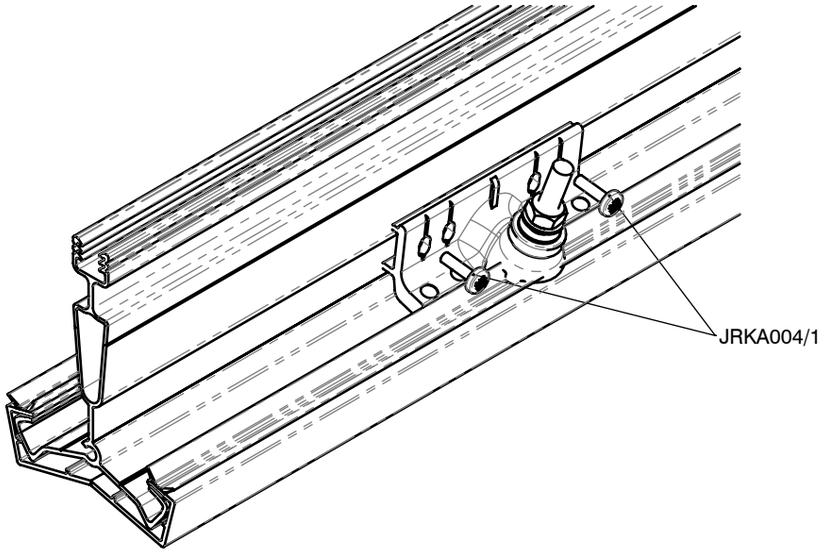

Anchor Clip Fixing

On PVC external roofs, every glazing bar requires an anchor clip to be installed at the top end of the bar. The following details show how the anchor clip is fitted to the glazing bar.

1. Align the drill jig with the end of the glazing bar section at the ridge end of the bar

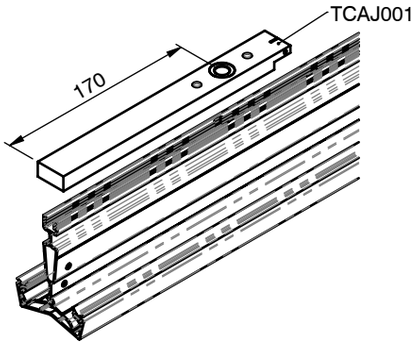

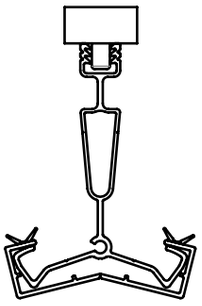

2. Once aligned, drill through the jig using the ∅10.3mm flute mill bit (TCAD001). Drill down through the glazing bar teeth, but not through the web.

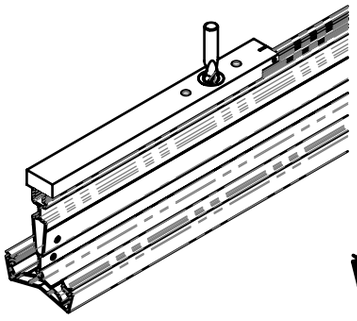

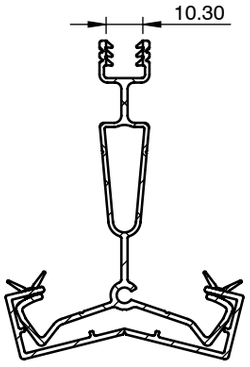

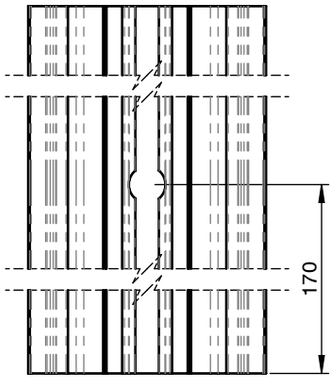

3. Place an anchor clip in the magnetic end of the jig and insert into the drilled cavity as shown below.

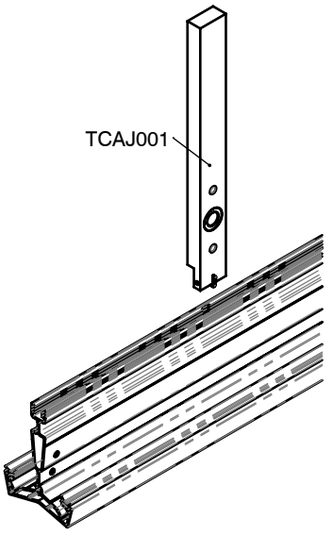

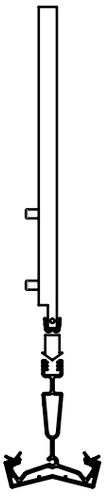

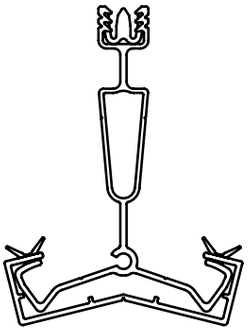

The anchor clip should be 170mm from the ridge end of the bar.
If the bar is a jack rafter, then the clip will sit lower than 170mm. The angle cut is applied to the bar followed by the anchor clip fixing.

Lantern Ridge

Assembly

The Classic Lantern ridge is a two part assembly consisting of a ridge body with a clip on ridge top cap. The ridge is fixed at 20° and has bolt slots to accommodate bar meeting at the ridge.

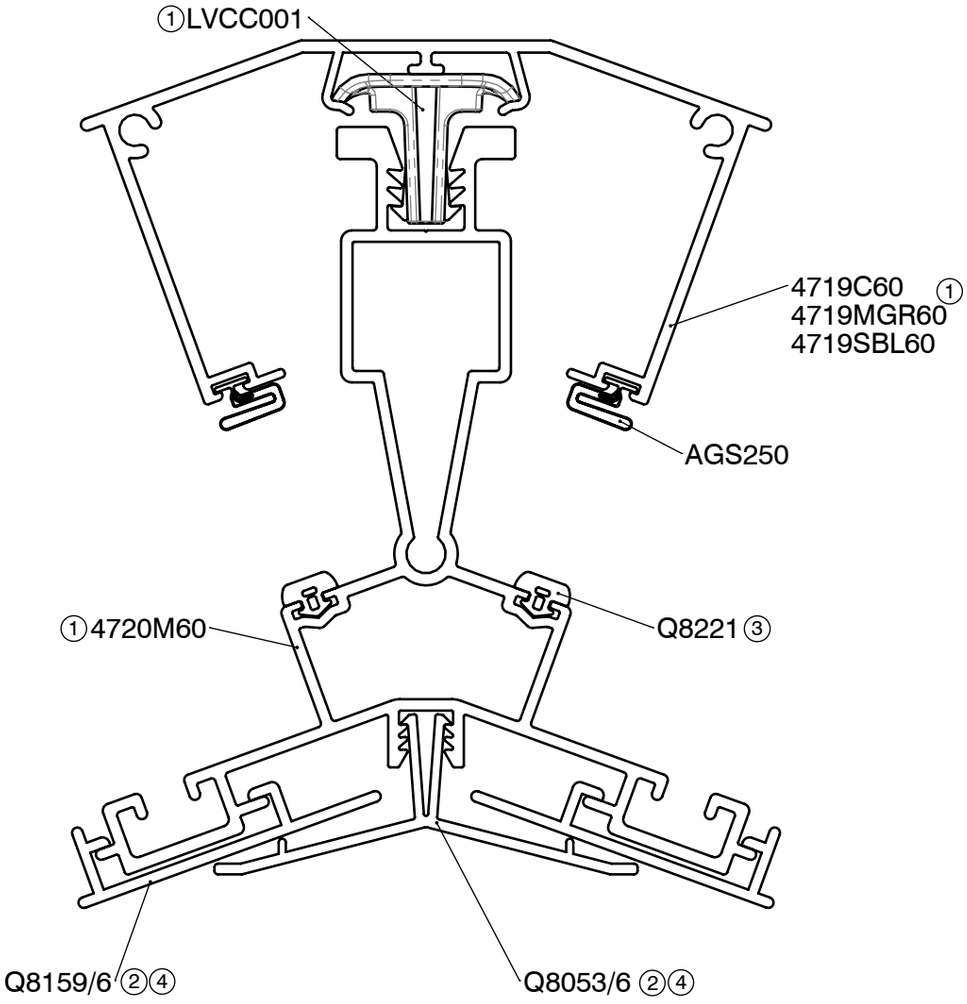

Cutting the lantern ridge components

1. Working from the roof plan supplied in the software fabrication report, cut the ridge 4720M60 and ridge top cap 4719 to the specified length indicated in the cutting list.

2. Looking at the cutting list, cut the ridge wing claddings Q8159/6 and the ridge undercladding Q8053/6 to the same length as the ridge and top cap.

3. Insert the ridge body gasket Q8221 into the channels on either side of the ridge. This gasket should be the same length as the ridge body.

4. Slide on both wing claddings Q8159/6 followed by the undercladding Q8053/6 onto the ridge body.

Assemble the lantern ridge components

5. Working from the ancillary list, insert the correct number of ridge top cap clips LVCC001 into the aluminium ridge topcap 4719, ensure that they are equally spaced.

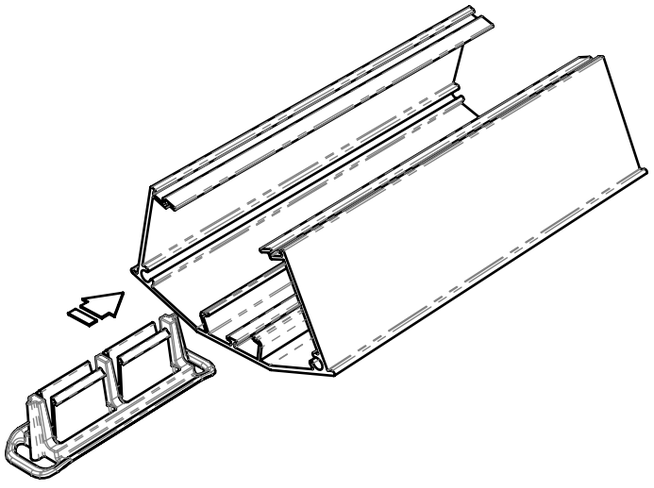

6. Insert the ridge top cap gaskets AGS250 into the slots on either side of the ridge top cap 4719.

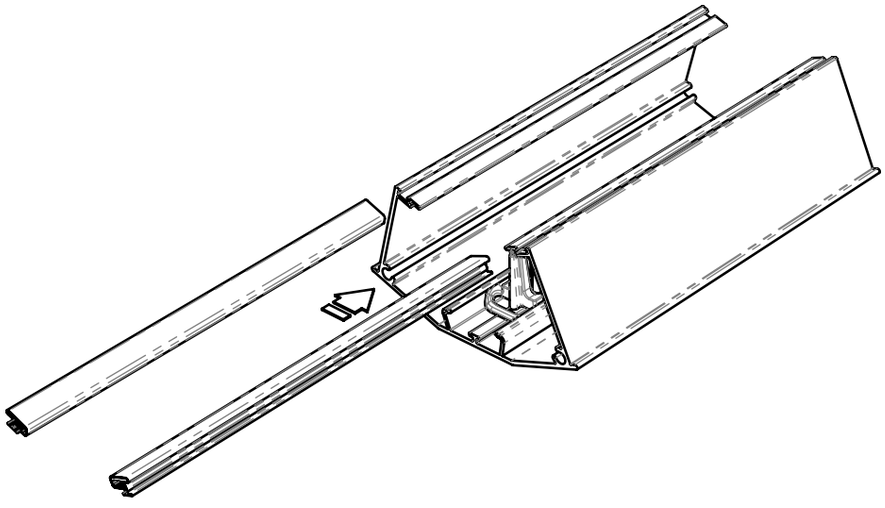

7. Clip down the pre assembled ridge top cap into the ridge body 4720M60 clip position.

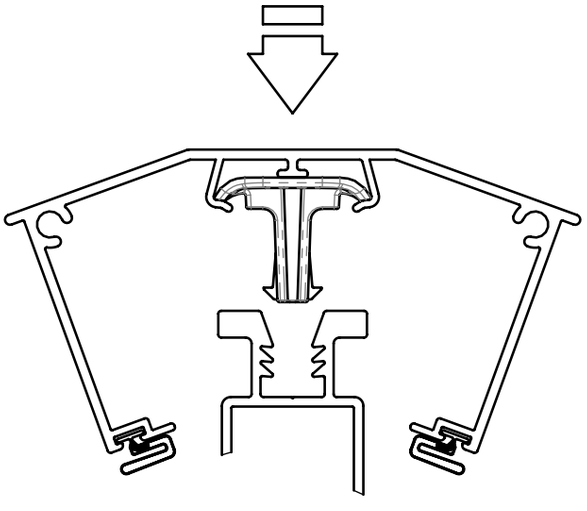

LANTERN RIDGE

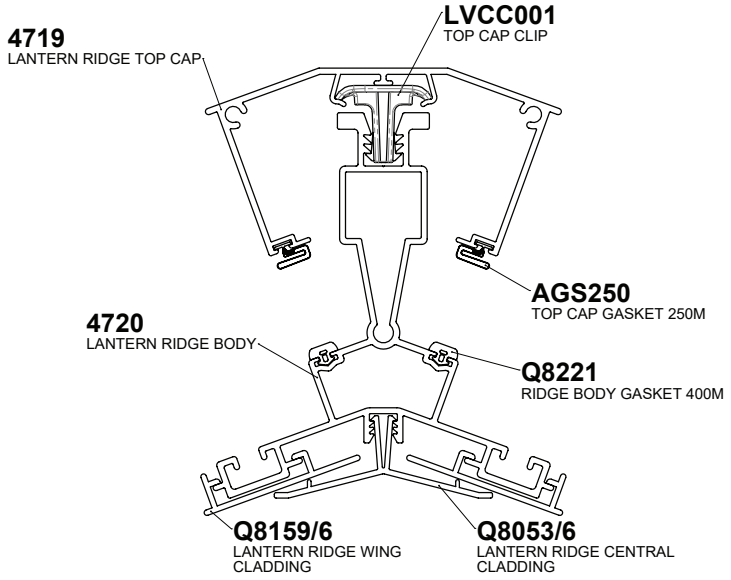

BAR END CAPS

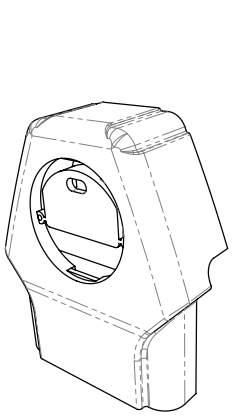

CCGA001
EDWARDIAN HIP END CAP

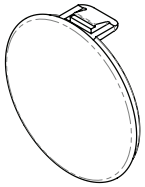

DCM001__/PL
BLANK END CAP INFILL

JACK RAFTER BRACKET

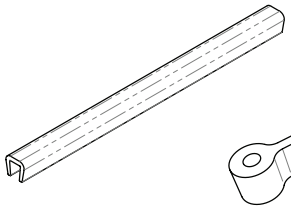

JRKA001/4
TENON SPACER

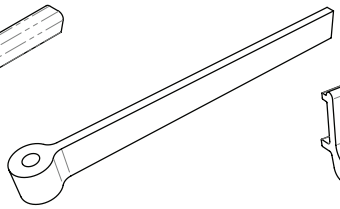

JRT015
TENON

LANTERN RIDGE END

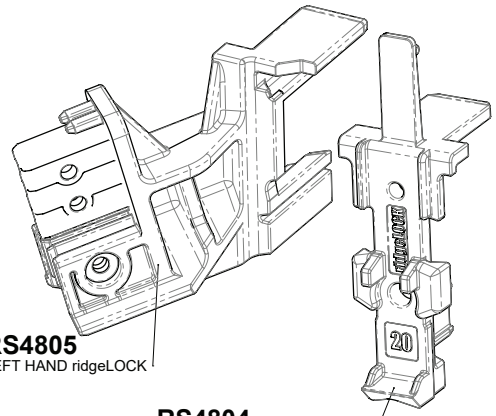

RS4805
LEFT HAND ridgeLOCK

RS4804
ridgeLOCK CLAMPING PLATE

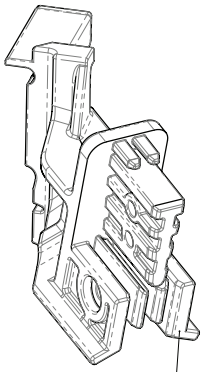

RS4806
RIGHT HAND ridgeLOCK

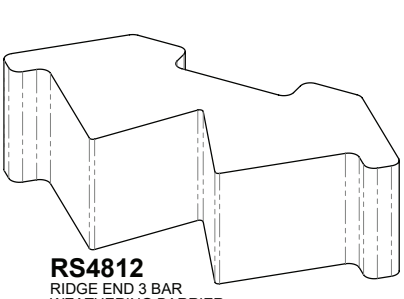

RS4812
RIDGE END 3 BAR WEATHERING BARRIER

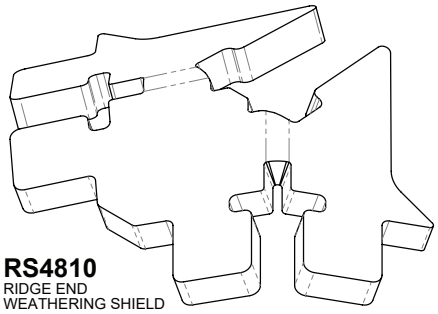

RS4810
RIDGE END WEATHERING SHIELD

GLAZING COMPONENTS

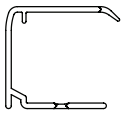

PCFD___24
GLAZING CLOSER 25mm

AGP___/25
ALUMINIUM GLAZING CLOSER 25mm

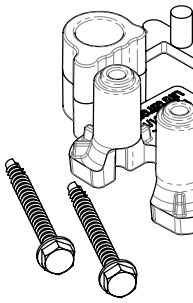

DGCE010
GLAZING STOP KIT

FLNS001
M6 SPIGGOT NUT

SHBC001S
M6 X 21.5mm EAVES BOLT

EBT001
M5 x 12mm TRILOBULAR SCREW

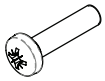

LANRF001
RIDGE END BRACKET FIXING

TCAC001
ANCHOR CLIP

FLN001
M6 FLANGED NUT

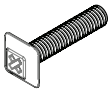

SHBC001SL
M6 X30mm SINGLE BOLT

RS3823
M5 x 20mm TRILOBULAR SCREW

JRKA004/1
3 BAR TENON FIXING

KDS001
END CAP FIXING SCREW

Classiclantern™
by Ultraframe

Component Identification Chart
13233_REV_L

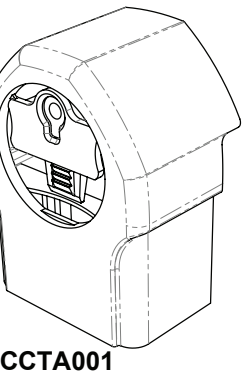

CCTA001
RAFTER END CAP

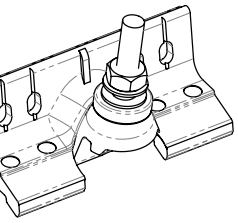

RKA002
KC RAFTER HIP BRACKET

PVC OPTION

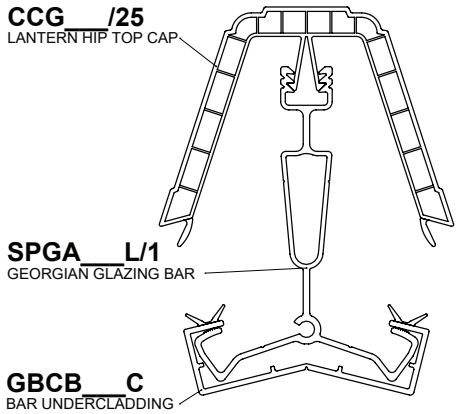

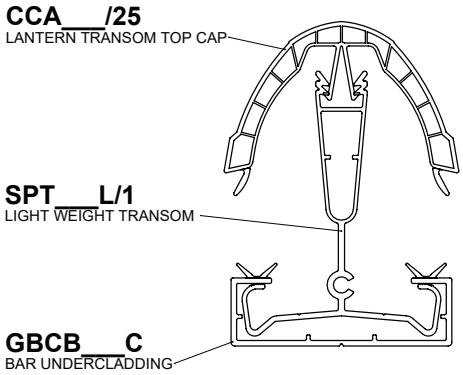

ALUMINIUM OPTION

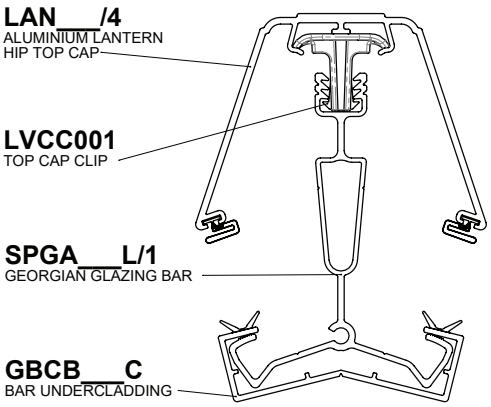

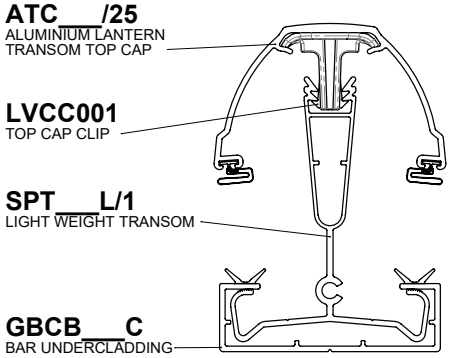

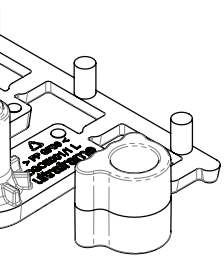

COVERS

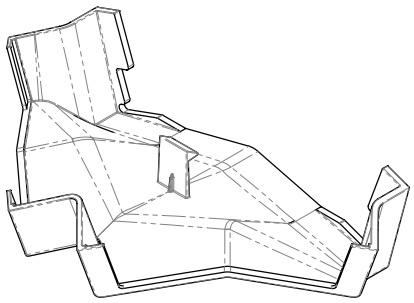

RS4803
RIDGE END INTERNAL
COVER

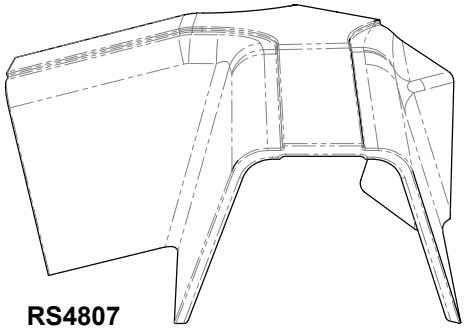

RS4807
RIDGE END COVER

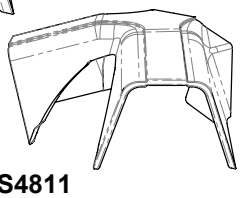

RS4811
CENTRAL BAR RIDGE END COVER

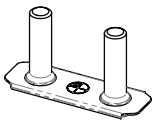

SHBC001T
TWIN BOLT

LANTERN EAVES

PSUB
GLAZING SUPPORT

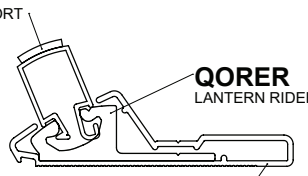

QORER
LANTERN RIDER RAIL

LANCE
LANTERN RIDER RAIL SLEEVE

THREE BAR ADAPTER

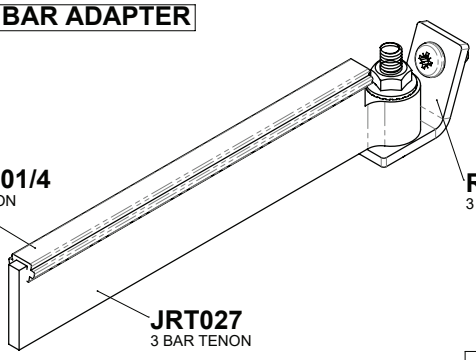

JRKA001/4
3 BAR TENON
SPACER

RS4809
3 BAR BRACKET

JRT027
3 BAR TENON

11/02/2020

Notes

Notes

www.ultraframetrade.co.uk

Ultraframe®

Job No.: 6043 01/20 V1 CLFG002